B.P.R. REV. NO.	STATE	FEDERAL PROJECT NO.	FISCAL YEAR	SHEET NO.	TOTAL SHEETS
	CALIF.				

DIST.	COUNTY	ROUTE	SECTION	REV. DATE	SHEET NO.
VIII	SBd	43	SBd		

APPROVED: _____

STATE HIGHWAY ENGINEER

CIVIL ENGINEER L.I.C. NO. _____

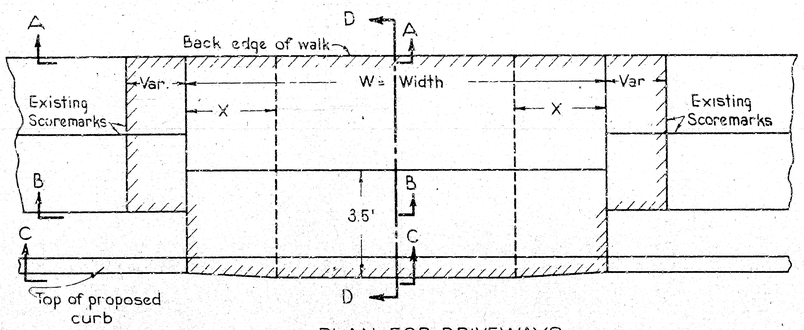

PLAN FOR DRIVEWAYS

Scale 1" = 2'

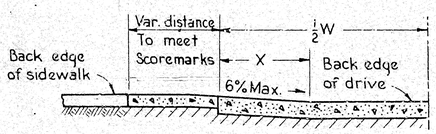

SECTION A-A

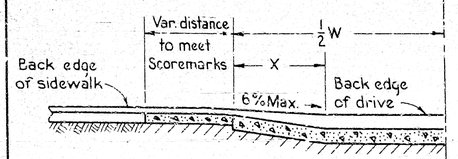

SECTION B-B

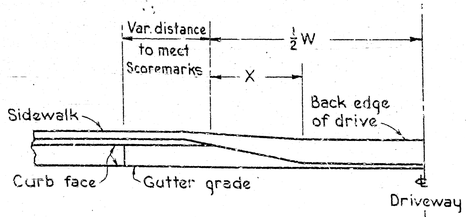

SECTION C-C

Scale: 1" = 2'

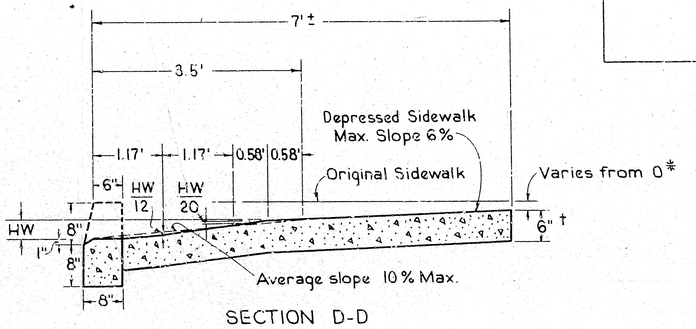

SECTION D-D

Scale: 1" = 1'

SUMMARY OF DRIVEWAYS			
Left Side		Right Side	
Approx. ℄ Sta.	Width W	Approx. ℄ Sta.	Width W
285+20	20	285+70	32
		288+50	32
		289+28	20
		289+70	32

* Where necessary, to meet maximum slopes of 6% on depressed sidewalk & 10% average on Ramp, depress back edge of walk as shown in Section A-A

† Where an existing sidewalk is in place which is less than 6 inches in thickness, that portion of such sidewalk within the limits of a driveway shall be removed and replaced with Portland Cement Concrete 6 inches in thickness and conforming to Standard Specifications.

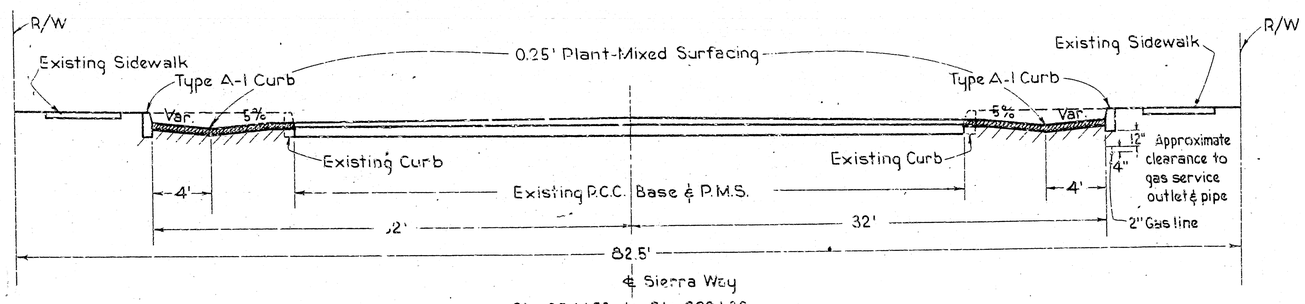

℄ Sierra Way

Sta. 284+53 to Sta. 290+36

VIII-SBD-43-SBD

SIERRA WAY BETWEEN RALSTON AVENUE AND FORTIETH STREET

TYPICAL CROSS SECTION

Scale 1" = 4'

RECOMMENDED: _____

ASSISTANT DIST. HIGHWAY ENGINEER

ASSISTANT STATE HIGHWAY ENGINEER

B.P.R. REV. NO.	STATE	FEDERAL PROJECT NO.	FISCAL YEAR	SHEET NO.	TOTAL SHEETS
	CALIF.				

DIST.	COUNTY	ROUTE	SECTION	REV. DATE	SHEET NO.
VIII	SBd	43	SBd		

APPROVED: _____

STATE HIGHWAY ENGINEER

CIVIL ENGINEER L.I.C. NO. _____

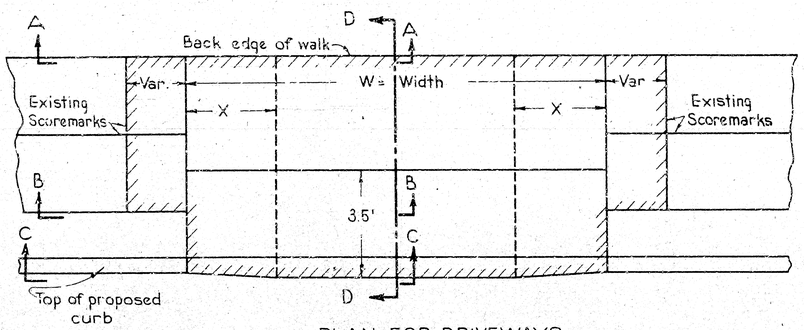

PLAN FOR DRIVEWAYS

Scale 1" = 2'

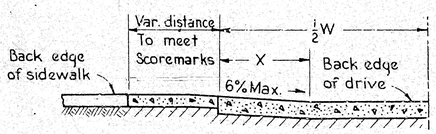

SECTION A-A

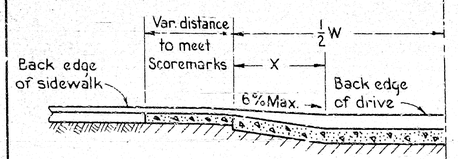

SECTION B-B

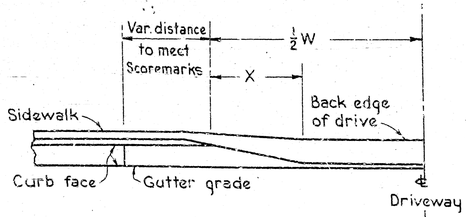

SECTION C-C

Scale: 1" = 2'

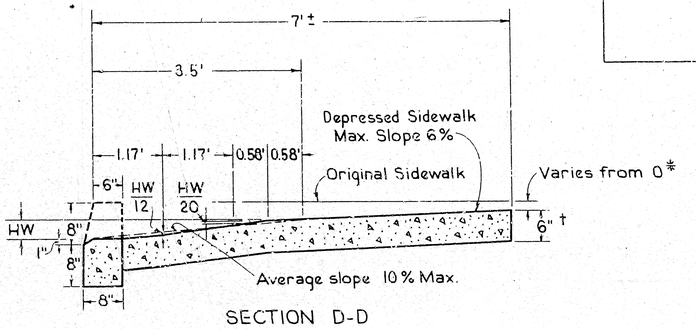

SECTION D-D

Scale: 1" = 1'

SUMMARY OF DRIVEWAYS			
Left Side		Right Side	
Approx. ℄ Sta.	Width W	Approx. ℄ Sta.	Width W
285+20	20	285+70	32
		288+50	32
		289+28	20
		289+70	32

* Where necessary, to meet maximum slopes of 6% on depressed sidewalk & 10% average on Ramp, depress back edge of walk as shown in Section A-A

† Where an existing sidewalk is in place which is less than 6 inches in thickness, that portion of such sidewalk within the limits of a driveway shall be removed and replaced with Portland Cement Concrete 6 inches in thickness and conforming to Standard Specifications.

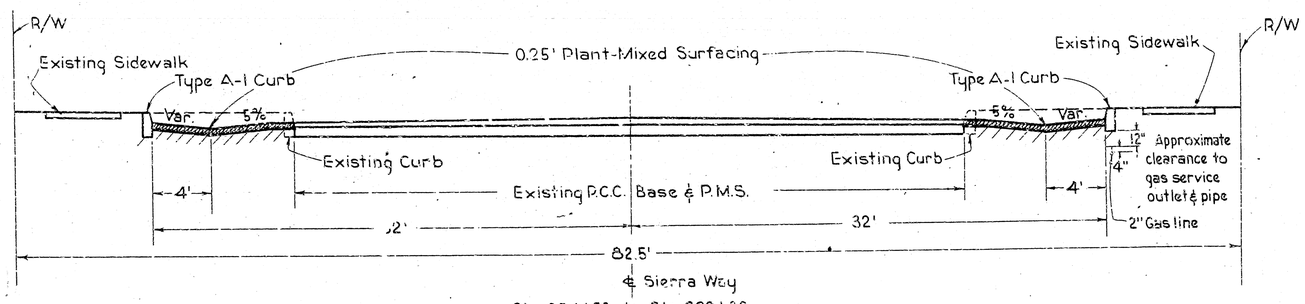

℄ Sierra Way

Sta. 284+53 to Sta. 290+36

VIII-SBD-43-SBD

SIERRA WAY BETWEEN RALSTON AVENUE AND FORTIETH STREET

TYPICAL CROSS SECTION

Scale 1" = 4'

RECOMMENDED: _____

ASSISTANT DIST. HIGHWAY ENGINEER

ASSISTANT STATE HIGHWAY ENGINEER